GT-C2004AQ-BTSESW

Display Solutions

20 x 4 Characters Display,

Blue STN, Transmissive, White LED backlight

1. Record of Revision

The following table tracks the history of the changes made to this document.

Date	Rev.	Summary	Design	Check

2. Scope

This specification is applied to the liquid crystal display module GT-C2004AQ-BTSESW
It's a STN, Positive,LCD module and display 20*4 Charactors.

3. Technology Specifications

3.1 Features

- Display Format : 20×4 Charactors
- Display Mode : STN,Negative,Blue
- Polarizer Mode : Transmissive
- Driving Method : 1/16Duty, 1/5 Bias
- Viewing Direction : 6 O'clock
- Backlight : LED, White
- Weight : ——
- Controller : S6A0069 or Equivalent.
- Interface : 8-Bit Parallel Interface

3.2 Mechanical Specifications

Item	Description	Unit
Module Dimension	98.0(W) × 60.0(H) × 14.0(Max)(T)	mm
Viewing Area	76.0(W) × 26.0(H)	mm
Active Area	70.4(W) × 20.8(H)	mm
Dot Size	0.55(W) × 0.55(H)	mm
Dot Pitch	0.60(W) × 0.60(H)	mm
Character Matrix	20X4	dots
Character Size	2.95*4.75	mm

3.3 System Block Diagram

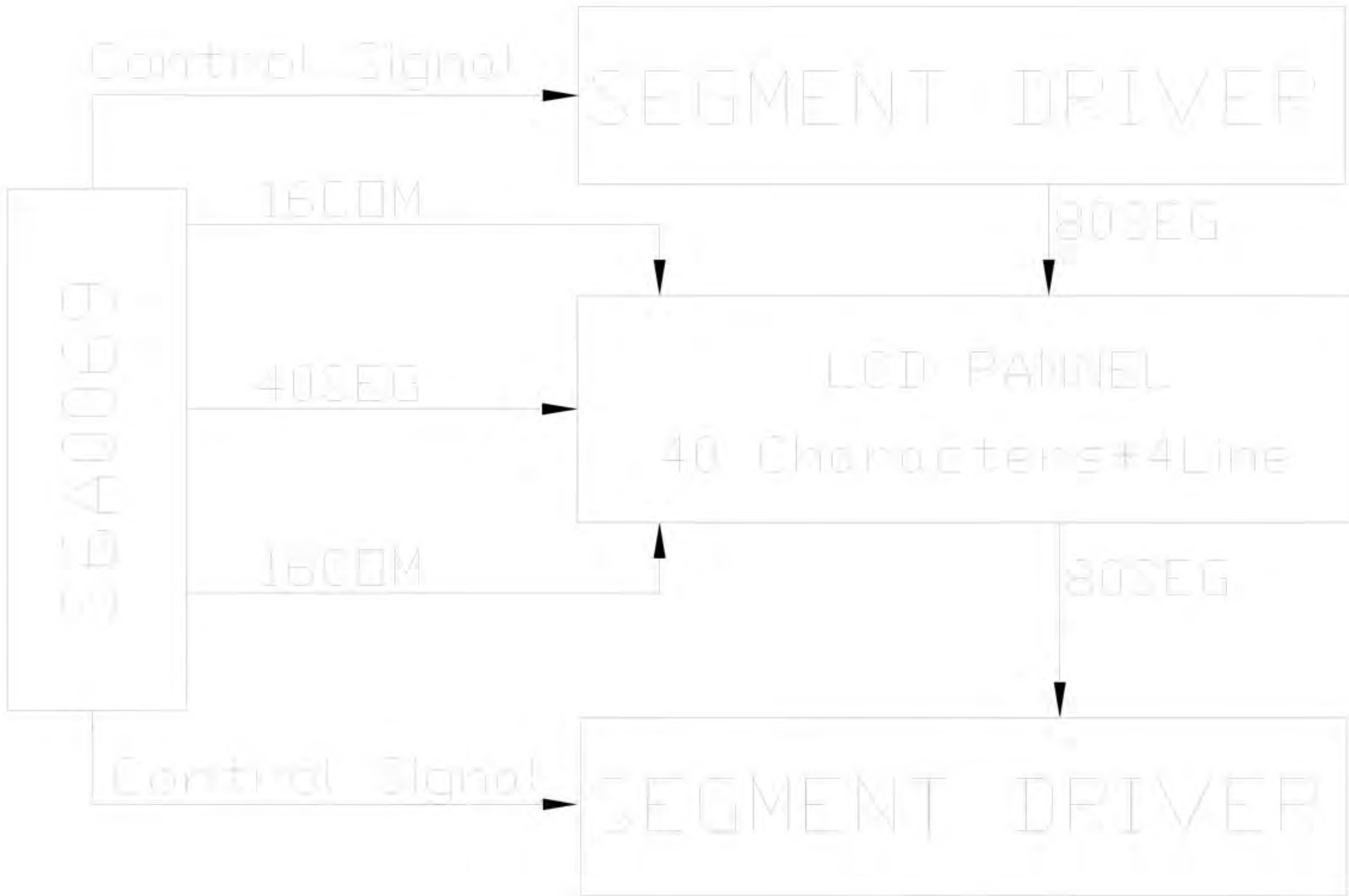

3.4 Terminal Functions

PIN No.	Symbol	Level	Function
1	V_{SS}	——	Ground
2	V_{DD}	——	Power supply for logic(+5.0V)
3	V0	——	Power supply for LCD
4	RS	H/L	Register selection H: Display data L: Instruction code
5	R/W	H/L	Read/Write selection H: Read operation L: Instruction code
6	E	H,H→L	Enable signal
7	D0	H/L	Data Bit0
8	D1	H/L	Data Bit1
9	D2	H/L	Data Bit2
10	D3	H/L	Data Bit3
11	D4	H/L	Data Bit4
12	D5	H/L	Data Bit5
13	D6	H/L	Data Bit6
14	D7	H/L	Data Bit7
15	LEDA	——	Power supply for LED backlight(+5.0V)
16	LEDK	——	Power supply for LED backlight(0V)

3.5 Dimensional Outline

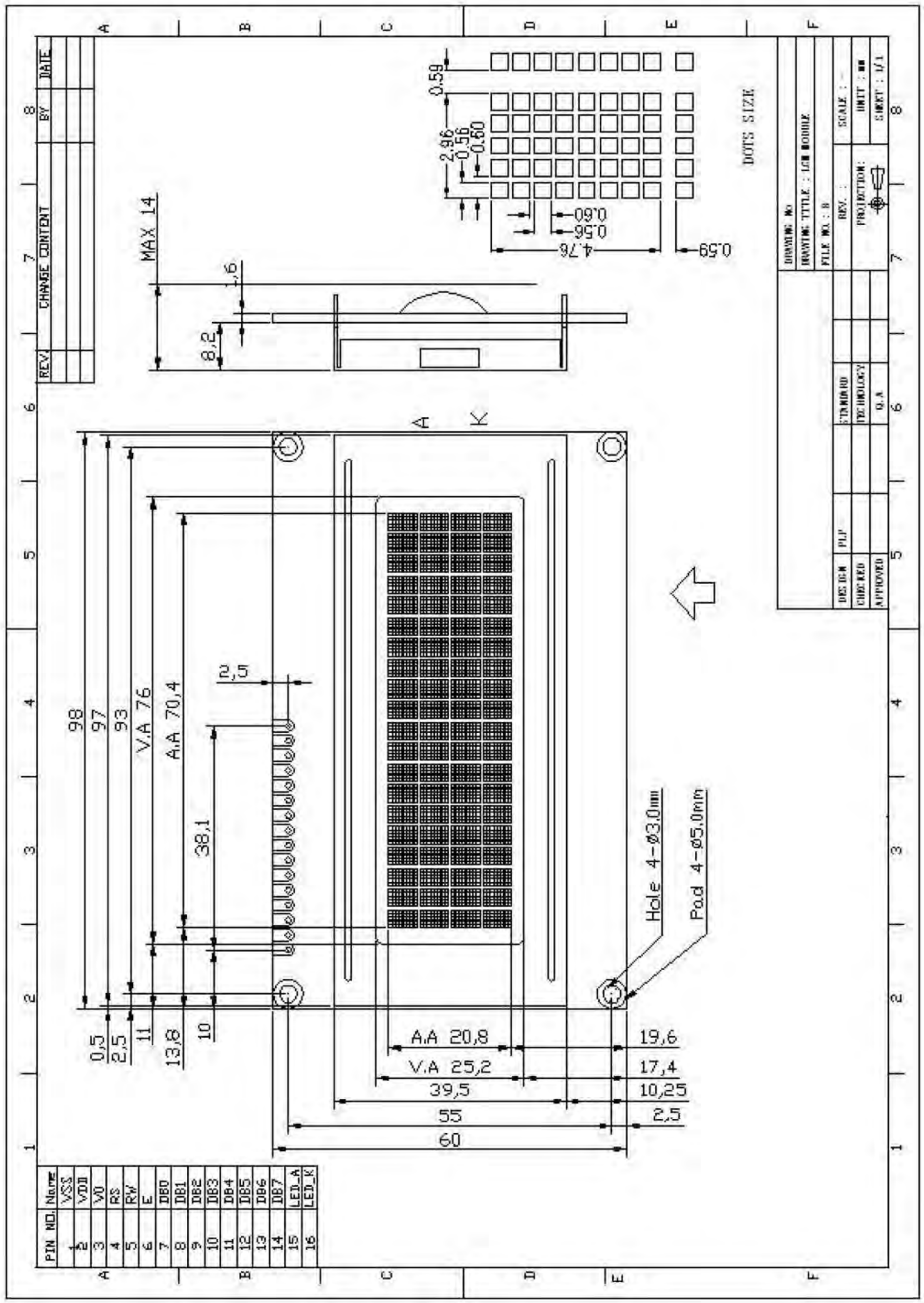

4. Absolute Maximum Ratings

Item	Symbol	Min.	Max.	Unit
Supply Voltage (Logic)	V_{DD}-V_{SS}	-0.3	7.0	V
Supply Voltage (LCD)	V_{DD}-V0	-0.3	13.0	V
Input Voltage	VI	-0.3	VDD+0.3	V
Operating Temperature	Topr	-20	70	℃
Storage Temperature	Tstg	-30	80	℃

5. Electrical Characteristics

5.1 DC Characteristics

Item	**Symbol**	**Condition**	**Min.**	**Typ.**	**Max.**	**Unit**
Supply Voltage (Logic)	VDD		4.5	5.0	5.5	V
Supply Voltage (LCD Drive)	VDD-VO	Ta = 25℃	——	4.5	——	V
Input High Voltage	VIH		2.2	——	VDD	V
Input Low Voltage	VIL		-0.3	——	0.8	V
Output High Voltage	VOH	IOH=-0.2mA	2.4	——	VDD	V
Output Low Voltage	VOL	IOL=1.2mA	0	——	0.4	V

5.2 AC Characteristics

Characteristic	Symbol	Min	Typ	Max	Unit
E cycle	t_C	1000	-	-	ns
E high level width	t_{WH}	450	-	-	ns
E low level width	t_{WL}	450	-	-	ns
E rise time	t_R	-	-	25	ns
E fall time	t_F	-	-	25	ns
Address set-up time	t_{ASU}	140	-	-	ns
Address hold time	t_{AH}	10	-	-	ns
Data set-up time	t_{DSU}	200	-	-	ns
Data delay time	t_D	-	-	320	ns
Data hold time (write)	t_{DHW}	10	-	-	ns
Data hold time (read)	t_{DHR}	20	-	-	ns

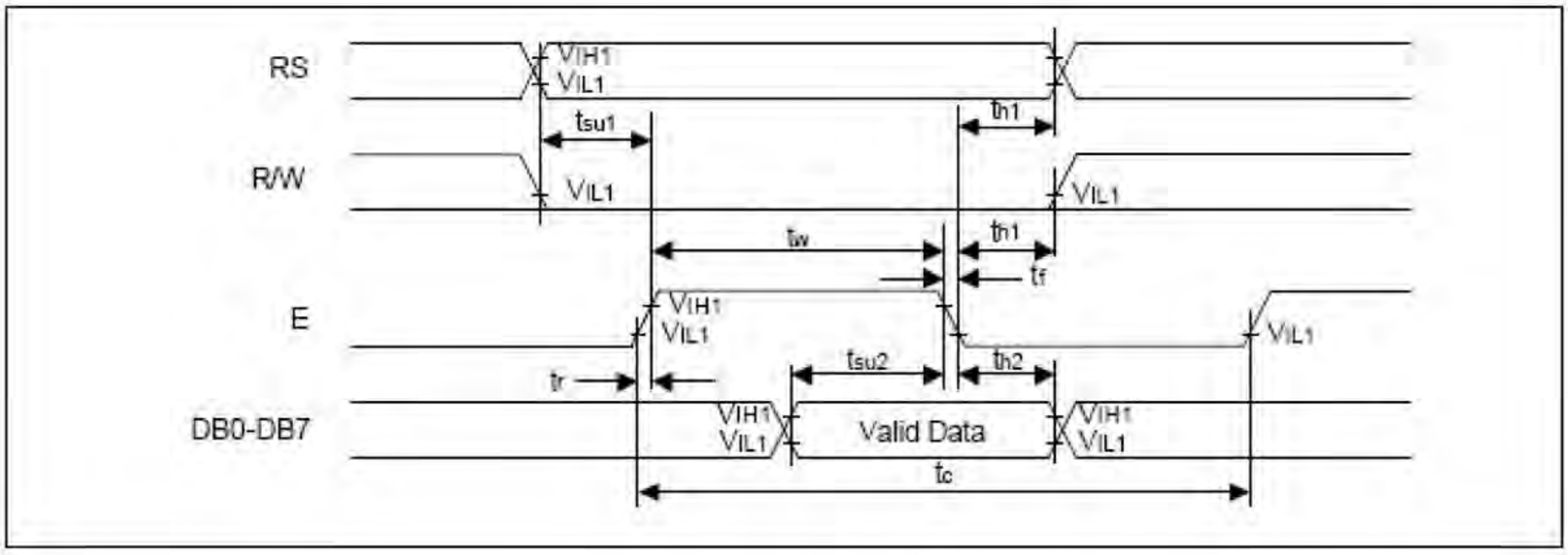

Write Mode Timing Diagram

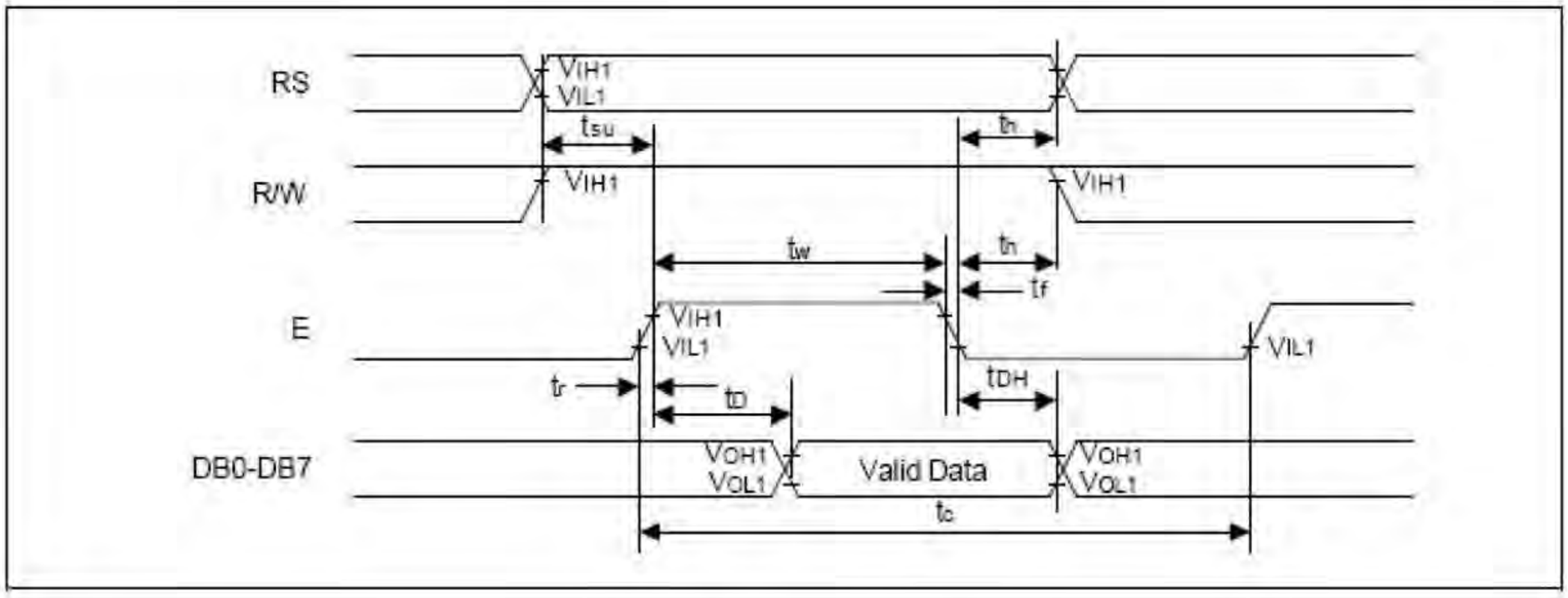

Read Mode Timing Diagram

6. LED Backlight Characteristics

Item	Symbol	Min.	Typ.	Max.	Condition	Unit
Forward Voltage	Vf	4.0	4.2	4.4	If = 260mA	V
Reverse Current	Ir	——	——	260	Vr=5V	uA
Peak Wave Length	λp	——	570	——	If = 260mA	nm
Spectral Line Half Width	Δλ	——	35	——		nm
Luminance	Lv	70	——	——	If = 260mA	cd/m^2
ElectroStatic Discharge	ESD	——	——	——		V

7. DISPLAY CONTROL INSTRUCTION

7.1 Summary

Instruction	Instruction Code										Description Instruction Code	Execution time(fsoc=270)
	RS	R/W	DB7	DB6	DB5	DB4	DB3	DB2	DB1	DB0		
Clear Display	0	0	0	0	0	0	0	0	0	1	Write "20H" to DDRAM. and set DDRAM address to "00H" from AC.	1.53ms
Return Home	0	0	0	0	0	0	0	0	1	X	Set DDRAM address to "00H" from AC and return cursor to its original position if shifted. The contents of DDRAM are not changed.	1.53ms
Entry Mode Set	0	0	0	0	0	0	0	1	I/D	SH	Assign cursor moving direction and make shift of entire display enable.	39μs
Display ON/OFF Control	0	0	0	0	0	0	1	D	C	B	Set display(D), cursor(C), and blinking of cursor(B) on/off control bit.	39μs
Cursor or Display Shift	0	0	0	0	0	1	S/C	R/L	X	X	Set cursor moving and display shift control bit, and the direction, without changing DDRAM data.	39μs
Function Set	0	0	0	0	1	DL	N	F	X	X	Set interface data length (DL : 4-bit/8-bit), numbers of display line (N : 1-line/2-line), display font type (F : 5 X 8 dots/ 5 X 11 dots)	39μs
Set CGRAM Address	0	0	0	1	AC5	AC4	AC3	AC2	AC1	AC0	Set CGRAM address in address counter.	39μs
Set DDRAM Address	0	0	1	AC6	AC5	AC4	AC3	AC2	AC1	AC0	Set DDRAM address in address counter.	39μs
Read Busy Flag and Address	0	1	BF	AC6	AC5	AC4	AC3	AC2	AC1	AC0	Whether during internal operation or not can be known by reading BF. The contents of address counter can also be read.	0μs
Write Data to RAM	1	0	D7	D6	D5	D4	D3	D2	D1	D0	Write data into internal RAM (DDRAM/CGRAM).	43μs
Read Data from RAM	1	1	D7	D6	D5	D4	D3	D2	D1	D0	Read data from internal RAM (DDRAM/CGRAM).	43μs

NOTE: When an MPU program with checking the Busy Flag (DB7) is made, it must be necessary 1/2 fosc is necessary for executing the next instruction by the falling edge of the 'E' signal after the Busy Flag (DB7) goes to "LOW".

7.2 Explanation of Instruction

Clear Display

RS	R/W	DB7	DB6	DB5	DB4	DB3	DB2	DB1	DB0
0	0	0	0	0	0	0	0	0	1

Clear all the display data by writing "20H" (space code) to all DDRAM address, and set DDRAM address to "00H" into AC (address counter). Return cursor to the original status, namely, bring the cursor to the left edge on first line of the display. Make entry mode increment (I/D = "1").

Return Home

RS	R/W	DB7	DB6	DB5	DB4	DB3	DB2	DB1	DB0
0	0	0	0	0	0	0	0	1	–

Return Home is cursor return home instruction. Set DDRAM address to "00H" into the address counter. Return cursor to its original site and return display to its original status, if shifted. Contents of DDRAM does not change.

Entry Mode Set

RS	R/W	DB7	DB6	DB5	DB4	DB3	DB2	DB1	DB0
0	0	0	0	0	0	0	1	I/D	SH

Set the moving direction of cursor and display.

I/D : Increment/decrement of DDRAM address (cursor or blink)
When I/D = "High", cursor/blink moves to right and DDRAM address is increased by 1.
When I/D = "Low", cursor/blink moves to left and DDRAM address is decreased by 1.
* CGRAM operates the same as DDRAM, when read from or write to CGRAM.

SH: Shift of entire display

When DDRAM read (CGRAM read/write) operation or SH = "Low", shift of entire display is not performed. If SH = "High" and DDRAM write operation, shift of entire display is performed according to I/D value (I/D = "1" : shift left, I/D = "0" : shift right).

Display ON/OFF Control

RS	R/W	DB7	DB6	DB5	DB4	DB3	DB2	DB1	DB0
0	0	0	0	0	0	1	D	C	B

Control display/cursor/blink ON/OFF 1 bit register.

D : Display ON/OFF Control Bit
When D = "High", entire display is turned on.
When D = "Low", display is turned off, but display data is remained in DDRAM.

C : Cursor ON/OFF Control Bit
When C = "High", cursor is turned on.
When C = "Low", cursor is disappeared in current display, but I/D register remains its data.

B : Cursor Blink ON/OFF Control Bit
When B = "High", cursor blink is on, that performs alternate between all the high data and display character at the cursor position.
When B = "Low", blink is off.

Cursor or Display Shift

RS	R/W	DB7	DB6	DB5	DB4	DB3	DB2	DB1	DB0
0	0	0	0	0	1	S/C	R/L	–	–

Shifting of right/left cursor position or display without writing or reading of display data. This instruction is used to correct or search display data (Refer to table 5). During 2-line mode display, cursor moves to the 2nd line after the 40th digit of the 1st line. Note that display shift is performed simultaneously in all the lines. When displayed data is shifted repeatedly, each line is shifted individually. When display shift is performed, the contents of the address counter are not changed.

Table 5. Shift Patterns According to S/C and R/L Bits

S/C	R/L	Operation
0	0	Shift cursor to the left, AC is decreased by 1
0	1	Shift cursor to the right, AC is increased by 1
1	0	Shift all the display to the left, cursor moves according to the display
1	1	Shift all the display to the right, cursor moves according to the display

Function Set

RS	R/W	DB7	DB6	DB5	DB4	DB3	DB2	DB1	DB0
0	0	0	0	1	DL	N	F	–	–

DL : Interface Data Length Control Bit
When DL = "High", it means 8-bit bus mode with MPU.
When DL = "Low", it means 4-bit bus mode with MPU. So to speak, DL is a signal to select 8-bit or 4-bit bus mode. When 4-bit bus mode, it needs to transfer 4-bit data by two times.

N : Display Line Number Control Bit
When N = "Low", it means 1-line display mode.
When N = "High", 2-line display mode is set.

F : Display Font Type Control Bit
When F = "Low", it means 5 × 8 dots format display mode
When F = "High", 5 × 11 dots format display mode.

Set CGRAM Address

RS	R/W	DB7	DB6	DB5	DB4	DB3	DB2	DB1	DB0
0	0	0	1	AC5	AC4	AC3	AC2	AC1	AC0

Set CGRAM address to AC. This instruction makes CGRAM data available from MPU.

Set DDRAM Address

RS	R/W	DB7	DB6	DB5	DB4	DB3	DB2	DB1	DB0
0	0	1	AC6	AC5	AC4	AC3	AC2	AC1	AC0

Set DDRAM address to AC. This instruction makes DDRAM data available from MPU. When 1-line display mode (N = 0), DDRAM address is from "00H" to "4FH". In 2-line display mode (N = 1), DDRAM address in the 1st line is from "00H" to "27H", and DDRAM address in the 2nd line is from "40H" to "67H".

Read Busy Flag & Address

RS	R/W	DB7	DB6	DB5	DB4	DB3	DB2	DB1	DB0
0	1	BF	AC6	AC5	AC4	AC3	AC2	AC1	AC0

This instruction shows whether S6A0069 is in internal operation or not. If the resultant BF is High, it means the internal operation is in progress and you have to wait until BF to be Low, and then the next instruction can be performed. In this instruction you can read also the value of address counter.

Write Data to RAM

RS	R/W	DB7	DB6	DB5	DB4	DB3	DB2	DB1	DB0
1	0	D7	D6	D5	D4	D3	D2	D1	D0

Write binary 8-bit data to DDRAM/CGRAM. The selection of RAM from DDRAM, CGRAM, is set by the previous address set instruction (DDRAM address set, CGRAM address set). RAM set instruction can also determine the AC direction to RAM. After write operation, the address is automatically increased/decreased by 1, according to the entry mode.

Read Data from RAM

RS	R/W	DB7	DB6	DB5	DB4	DB3	DB2	DB1	DB0
1	1	D7	D6	D5	D4	D3	D2	D1	D0

Read binary 8-bit data from DDRAM/CGRAM. The selection of RAM is set by the previous address set instruction. If address set instruction of RAM is not performed before this instruction, the data that read first is invalid, because the direction of AC is not determined. If you read RAM data several times without RAM address set instruction before read operation, you can get correct RAM data from the second, but the first data would be incorrect, because there is no time margin to transfer RAM data. In case of DDRAM read operation, cursor shift instruction plays the same role as DDRAM address set instruction : it also transfers RAM data to output data register. After read operation address counter is automatically increased/decreased by 1 according to the entry mode. After CGRAM read operation, display shift may not be executed correctly.

NOTE

In case of RAM write operation, after this AC is increased/decreased by 1 like reading operation. In this time, AC indicates the next address position, but you can read only the previous data by read instruction.

8. Precautions For use of LCD Module

8.1 Handling Precautions

LCD modules are assembled and adjusted with a high degree of precision, do not applying excessive shocks to it or making any alterations or modifications to it, the following precautions should be taken when handing.

— The display panel is made of glass. Do not subject it to a mechanical shock by dropping it from a high place, etc.

— If the display panel is damaged and the liquid crystal substance inside it leaks out, be sure not to get any in your mouth. If the substance comes into contact with your skin or clothes, promptly wash it off using soap and water.

— Do not apply excessive force on the surface of display or the adjoining areas of LCD module since this may cause the color tone to vary.

— If the display surface of LCD module becomes contaminated, blow on the surface and gently wipe it with a soft dry cloth. If it is heavily contaminated, moisten cloth with one of the following solvents.

- Isopropyl alcohol
- Ethyl alcohol

Solvents other than those mentioned above may damage the polarizer. Especially, do not use the following:

- Water
- Ketone
- Aromatic Solvents

— The polarizer covering the display surface of the LCD module is soft and easily scratched. Handle this polarizer carefully.

— To minimize the performance degradation of the LCD modules resulting from destruction caused by static electricity, etc., exercise care to avoid touching the following sections when handling the module:

- Terminal electrode sections.
- Part of pattern wiring on TAB, etc.

8.2 Electro-Static Discharge Control

— The IC mounted on the LCD is very susceptible to static electricity. To protect them from static electricity which your body and clothing collect, connect your body to the ground via a resistor of some 1M Ω so that electricity should discharge connect the resistor close to your body in the grounding line and protect yourself from electric shock hazard.

— Module should be store in antistatic bag or other containers resistant to static after remove from its original package.

— The LCD modules use CMOS LSI drivers, so customers are recommend that any unused input terminal would be connected to VDD or VSS, do not input any signals before power is turned on, and ground your body, work/assembly areas, assembly equipment to protect

against static electricity.

— In order to reduce the generation of static electricity, a relative humidity of 50-60% is recommended.

— The LCD module is coated with a film to protect the display surface. Take care when peeling off this protective film since static electricity may be charged.

— Tools required for assembly, such as soldering irons, must be properly grounded.

8.3 Design Precautions

— The absolute maximum ratings represent the rated value beyond which LCD module can not exceed. When the LCD modules are used in excess of this rated value, their operating characteristics may be adversely affected.

— To prevent the occurrence of erroneous operation caused by noise, attention must be paid to satisfy VIL, VIH specification values, including taking the precaution of using signal cables that are short.

— The liquid crystal display exhibits temperature dependency characteristics. Since recognition of the display becomes difficult when the LCD is used outside its designated operating temperature range, be sure to use the LCD within this range. Also, keep in mind that the LCD driving voltage levels necessary for clear displays will vary according to temperature.

— Sufficiently notice the mutual noise interference occurred by peripheral devices.

— To cope with EMI, take measures basically on outputting side.

— If DC is impressed on the liquid crystal display panel, display definition is rapidly deteriorated by the electrochemical reaction that occurs inside the liquid crystal display panel. To eliminate the opportunity of DC impressing, be sure to maintain the AC characteristics of the input signals sent to the LCD Module.

8.4 Soldering Precautions

Soldering should apply to I/O terminals only.

— Soldering temperature is 280℃+(-)10℃.

— Soldering time 3-4 seconds.

— Eutectic solder (rosin flux filled) should be used.

— Only properly grounded soldering iron should be used.

— If soldering flux is used, be sure to remove any remaining flux after finishing the soldering operation and LCD surface should be covered during soldering to prevent any damage to flux spatters.

— When remove the lead wires from the I/O terminals, use proper de-soldering methods, e.g. suction type de-soldering irons. Do not repeat wiring by soldering more than three times at the pads and plated though holes may be damaged.

8.5 Operational Precautions

— Do not remove the panel or frame from the liquid crystal display module.

— Power supplies should always be turned on before the independent input signal sources turned on, and input signals should be turned off before power supplies turned off.

— The IC would break down if the driving voltage exceeds the limit. Make sure of electrical specifications, particularly the supply voltage.

— It is an indispensable condition to drive LCD's within the specified voltage limit since the higher voltage than the limit causes the shorter LCD life. The use of direct current drive should be avoided because an electrochemical reaction due to direct current causes LCD's undesirable deterioration.

— Some font will be abnormally displayed when the display area is pushed hard during operation. But It resumes normal condition after turning off once.

— The response of the display is slow when the ambient temperature is below the lower limit, and the display surface appears dark everywhere when the ambient temperature is above the upper limit, in any case, id does not mean failure. It operates properly in the normal operating temperature range.

— The contrast of the liquid crystal display varies with the viewing angle, ambient temperature, and driving voltage. Adjust the driving voltage for the best contrast by installing external variable switch.

— If the LCD modules have been operating for a long time showing the same display patterns, the display patterns may remain on the screen as ghost images and a slight contrast irregularity may also appear. A normal operating status can be regained by suspending use for some time. It should be noted that this phenomenon does not adversely affect performance reliability.

Condensation on terminals can cause an electrochemical reaction disrupting the terminal circuit. To reduce the amount of static electricity generated, do not conduct assembly and other work under dry conditions. Therefore it must be used under the relative condition of 50% RH.

8.6 Storage Precautions

— Take care to minimize corrosion of the electrodes. Water droplets or a current flow in a high humidity environment accelerates corrosion of the electrodes.

— When storing the LCD module, avoid exposure to direct sunlight or to the light of fluorescent lamps. Keep the LCD module in sealed polyethylene bags designed to prevent static electricity charging under low temperature / normal humidity conditions (avoid high temperature / high humidity and low temperature below 0). The temperature range of 0℃~ -30℃ and at low humidity is recommended.

Whenever possible, the LCD module should be stored in the same conditions in which they were shipped from our company.