GT-G240128BW-BTSESW

LCD

240x128 Graphic LCD,
Negative Blue STN, Transmissive ,
White LED Backlight (5V)

CONTENTS

FUNCTIONS & FEATURES---------- 3

BLOCK DIAGRAM ---------- 3

MODULE OUTLINE DRAWING---------- 4

INTERFACE PIN FUNCTIONS ---------- 5

ABSOLUTE MAXIMUM RATINGS (Ta = 25℃) ---------- 6

DC ELECTRICAL CHARACTERISTICS---------- 6

LED BACKLIGHT CHARACTERISTICS---------- 6

CONNECTION WITH MCU---------- 7

TYPICAL V0 CONNECTIONS FOR DISPLAY CONTRAST ---------- 7

AC CHARACTERISTICS ---------- 8

OPTICAL CHARACTERISTICS ---------- 11

DISPLAY FUNCTIONS ---------- 13

CHARACTER CODE MAP ---------- 15

RELIABILITY TEST CONDITION---------- 16

PRECAUTION FOR SOLDERING TO THE LCM ---------- 17

PRECAUTION FOR USING LCM MODULE---------- 17

OTHERS---------- 18

FUNCTIONS & FEATURES

- Construction : SMT
- Display Format : 240x128 dots
- Display Type : STN, Transmissive, Negative, Blue
- Controller : RA6963 or compatible controller
- Interface : 8-bit parallel interface
- Backlight : white/side light/5.0V
- Viewing Direction : 6 O'clock
- Driving Scheme : 1/128 Duty Cycle, 1/12.2 Bias
- Power Supply Voltage : 5.0V
- V_{LCD} Adjustable For Best Contrast : 16.0V ($V_{OP.}$)
- Operation temperature : -20℃ to +70℃
- Storage temperature : -30℃ to +80℃

BLOCK DIAGRAM

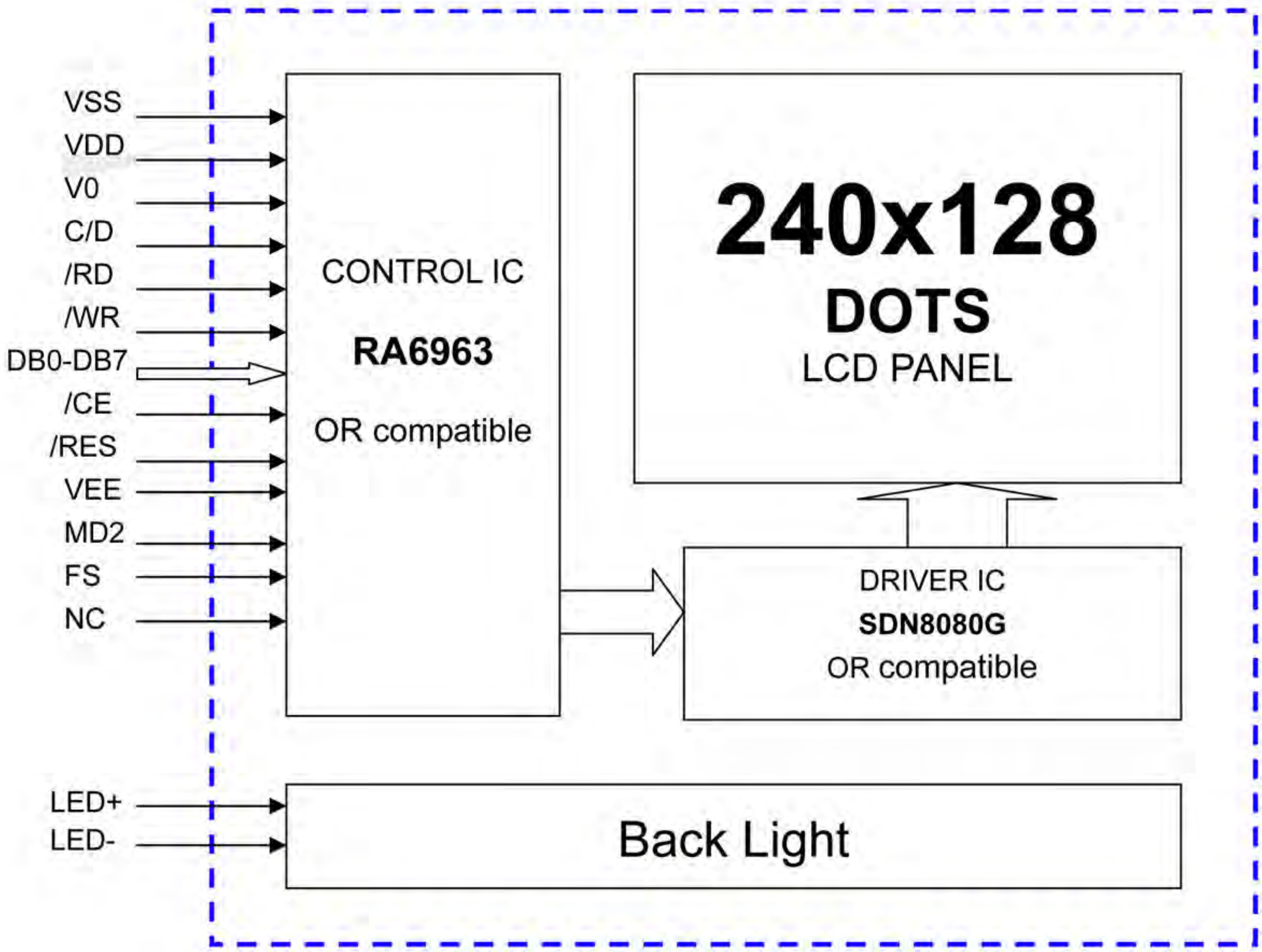

MODULE OUTLINE DRAWING

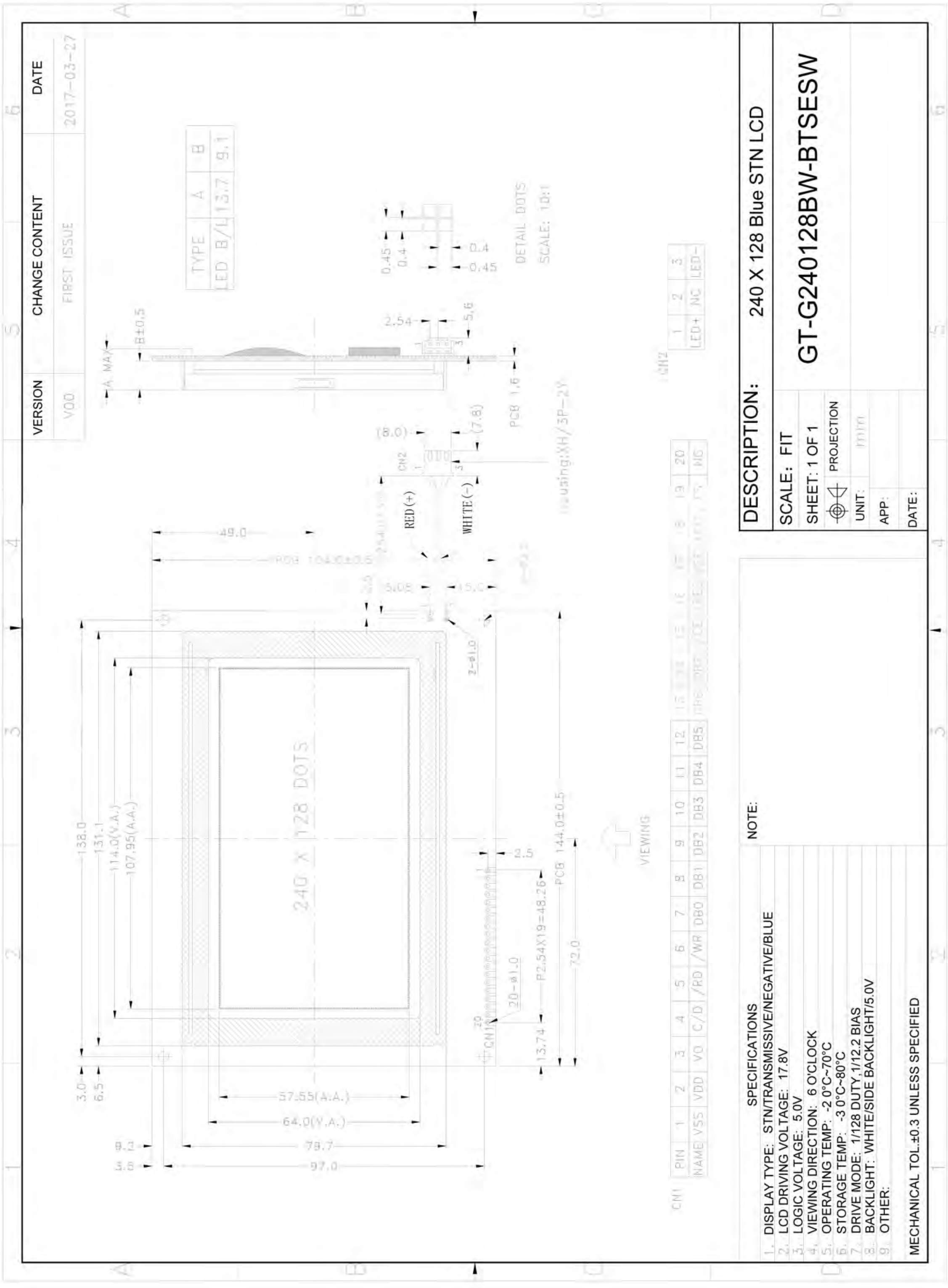

SPECIFICATIONS

1. DISPLAY TYPE: STN/TRANSMISSIVE/NEGATIVE/BLUE
2. LCD DRIVING VOLTAGE: 17.8V
3. LOGIC VOLTAGE: 5.0V
4. VIEWING DIRECTION: 6 O'CLOCK
5. OPERATING TEMP: -2 0°C~70°C
6. STORAGE TEMP: -3 0°C~80°C
7. DRIVE MODE: 1/128 DUTY,1/12.2 BIAS
8. BACKLIGHT: WHITE/SIDE BACKLIGHT/5.0V
9. OTHER:

INTERFACE PIN FUNCTIONS

<table>
<tr><th>Pin No.</th><th>Symbol</th><th>Level</th><th>Description</th></tr>
<tr><td>1</td><td>VSS</td><td>0V</td><td>Ground output for pad option.</td></tr>
<tr><td>2</td><td>VDD</td><td>+5.0V</td><td>Supply voltage for logic operating.</td></tr>
<tr><td>3</td><td>V0</td><td>--</td><td>Adjusting LCD driver supplies voltages.</td></tr>
<tr><td>4</td><td>C/D</td><td>H/L</td><td>WR=L.....C/D=H: Command Write C/D=L: Data Write
RD=L.....C/D=H: Status Read C/D=L: Data Read</td></tr>
<tr><td>5</td><td>/RD</td><td>H/L</td><td>Data read. Read data from T6963C when RD=L.</td></tr>
<tr><td>6</td><td>/WR</td><td>H/L</td><td>Data write. Write data into T6963C when WR=L.</td></tr>
<tr><td>7</td><td>DB0</td><td>H/L</td><td rowspan="8">Data I/O pins between CPU and T6963C (D7 is MSB)</td></tr>
<tr><td>8</td><td>DB1</td><td>H/L</td></tr>
<tr><td>9</td><td>DB2</td><td>H/L</td></tr>
<tr><td>10</td><td>DB3</td><td>H/L</td></tr>
<tr><td>11</td><td>DB4</td><td>H/L</td></tr>
<tr><td>12</td><td>DB5</td><td>H/L</td></tr>
<tr><td>13</td><td>DB6</td><td>H/L</td></tr>
<tr><td>14</td><td>DB7</td><td>H/L</td></tr>
<tr><td>15</td><td>/CE</td><td>H/L</td><td>Chip Enable for T6963C. CE must be L when CPU communicates with T6963C.</td></tr>
<tr><td>16</td><td>/RES</td><td>H/L</td><td>H.....Normal (T6963C has internal pull-up resister)
L.....Initialize T6963C. Text and Graphic have addresses and text and graphic area settings are retained.</td></tr>
<tr><td>17</td><td>VEE</td><td>--</td><td>Negative voltage output.</td></tr>
<tr><td>18</td><td>MD2</td><td>H/L</td><td>Pins for selection of number of columns. The pin MD3 has been connected to the HIGH in the PCB.
<table>
<tr><td>MD2</td><td>H</td><td>L</td><td>H</td><td>L</td></tr>
<tr><td>MD3</td><td>H</td><td>H</td><td>L</td><td>L</td></tr>
<tr><td>Columns</td><td>32</td><td>40</td><td>64</td><td>80</td></tr>
</table></td></tr>
<tr><td>19</td><td>FS</td><td>H/L</td><td>Pins for selection of font. The FS0 has been connected to the GND on the PCB.
<table>
<tr><td>FS0</td><td>H</td><td>L</td><td>H</td><td>L</td></tr>
<tr><td>FS1</td><td>H</td><td>H</td><td>L</td><td>L</td></tr>
<tr><td>Font</td><td>5×8</td><td>6×8</td><td>7×8</td><td>8×8</td></tr>
</table></td></tr>
<tr><td>20</td><td>NC</td><td>--</td><td>Non-connection.</td></tr>
</table>

CN2:

Pin No.	Symbol	Level	Description
1	LED+	+5.0V	Power supply for backlight.
2	LED-	0V	The backlight ground.

ABSOLUTE MAXIMUM RATINGS (Ta = 25℃)

Parameter	Symbol	M_{IN}	M_{AX}	Unit
Supply voltage for logic	V_{DD}	-0.3	+7.0	V
Supply voltage for LCD	V_o	-0.3	+18.0	V
Input voltage	V_I	-0.3	V_{DD} +0.3	V
Normal Operating temperature	T_{OP}	-20	+70	℃
Normal Storage temperature	T_{ST}	-30	+80	℃

Note: Stresses beyond those given in the Absolute Maximum Rating table may cause operational errors or damage to the device. For normal operational conditions see AC/DC Electrical Characteristics.

DC ELECTRICAL CHARACTERISTICS

Parameter	Symbol	Condition	M_{IN}	T_{YP}	M_{AX}	Unit
Supply voltage for logic	V_{DD}	--	4.8	5.0	5.2	V
Supply current for logic	I_{DD}	--	--	20	40	mA
Operating voltage for LCD	V_{LCD}	-20℃	--	--	--	V
		+25℃	15.6	16.0	16.4	
		+70℃	--	--	--	
Supply voltage for Back Light	V_{BL}	--	4.0	4.2	4.4	V
Supply current for Back Light	I_{BL}	--	--	180	200	mA
Input voltage“H”level	V_{IH}	--	VDD-2.2	--	VDD	V
Input voltage “L” level	V_{IL}	--	0	--	0.8	V

LED BACKLIGHT CHARACTERISTICS

Colour: white

Parameter	Symbol	Condition	M_{IN}	T_{YP}	M_{AX}	Unit
Forward Voltage	Vf	If=90*2mA	2.8	3.0	3.2	V
Reverse Current	Ir	Vr=5.0V	--	--	120	μA
Wavelength	λd	If=90*2mA	--	--	--	nm
Color Coordinate	X	If=90*2mA	0.280	0.300	0.320	nm
	Y		0.270	0.290	0.310	
Spectral width at half height	Δλ	If=90*2mA	--	30	--	nm
Luminance	Lv Sub.	If=90*2mA	600	650	--	cd/m^2
Uniformity	Δ	M_{IN}/M_{AX}*100%	80	--	--	%

NOTE: Do not connect +5V directly to the backlight terminals. This will ruin the backlight.

CONNECTION WITH MCU

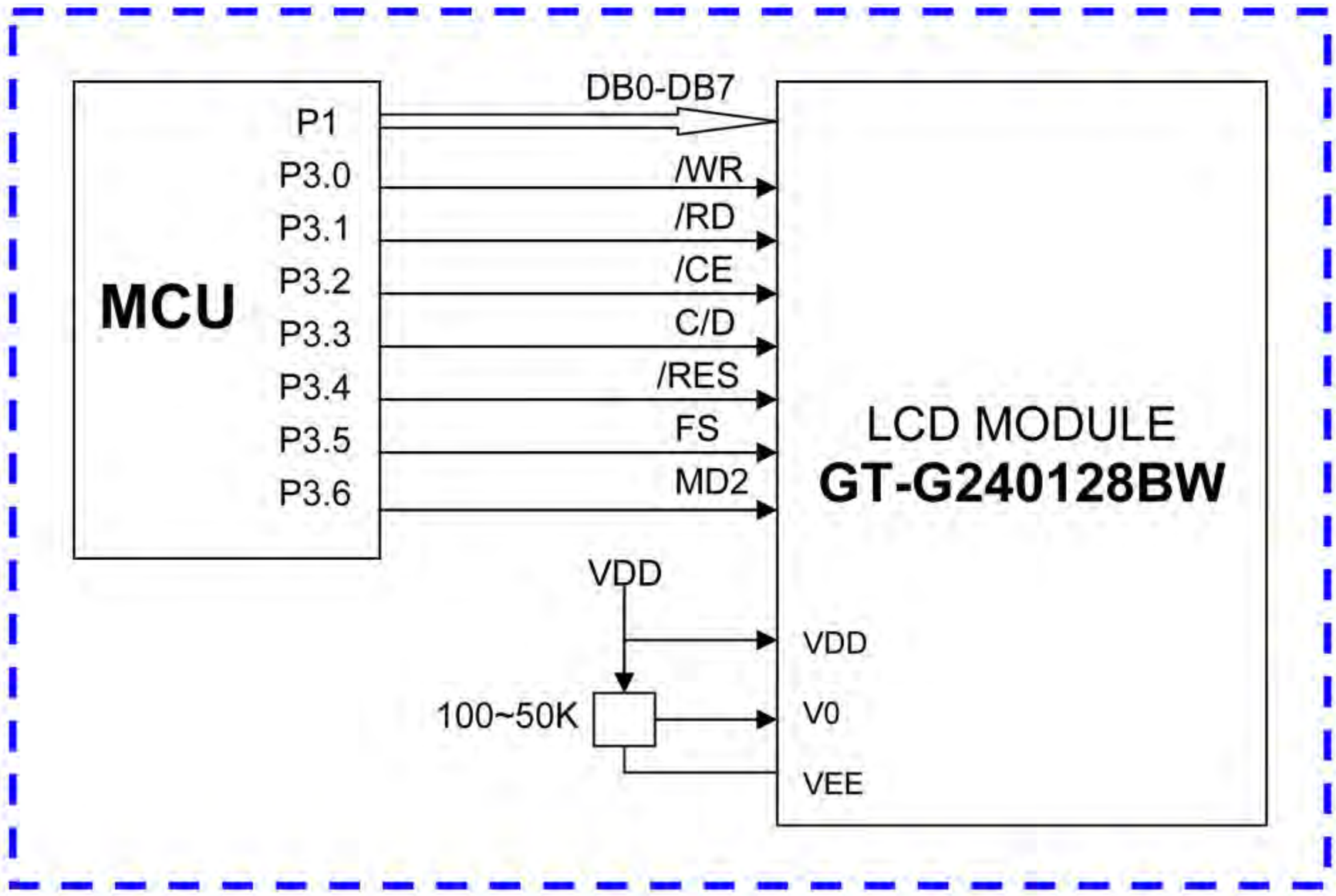

NOTE: Memory address line VA13 is connected to VDD。

TYPICAL V0 CONNECTIONS FOR DISPLAY CONTRAST

Adjust V0 to VDD (VLCD=17.8V) as an initial setting. When the module is operational, readjust V0 for optimal display appearance.

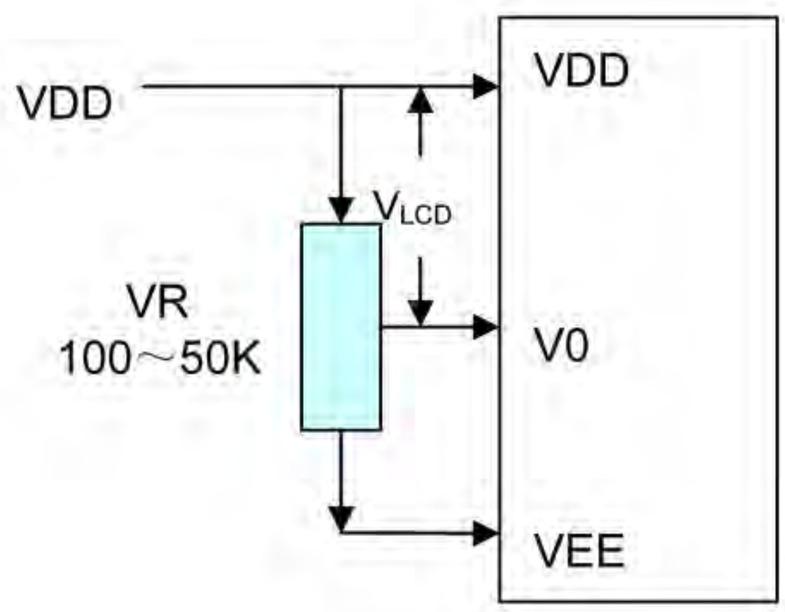

We recommend allowing field adjustment of V0 for all designs. The optimal value for V0 will change with temperature, variations in VDD, and viewing angle. V0 will also vary module-to-module and batch-to-batch due to normal manufacturing variations.

Ideally, adjustment to V0 should be available to the end user so each user can adjust the display to the optimal contrast for their required viewing conditions. As a minimum, your design should allow V0 to be adjusted as part of your product's final test.

Although a potentiometer is shown as a typical connection, V0 can be driven by your microcontroller, either by using a DAC or a filtered PWM. Displays that require V0 to be negative may need a level-shifting circuit.

AC CHARACTERISTICS

Switching Characteristics (1)

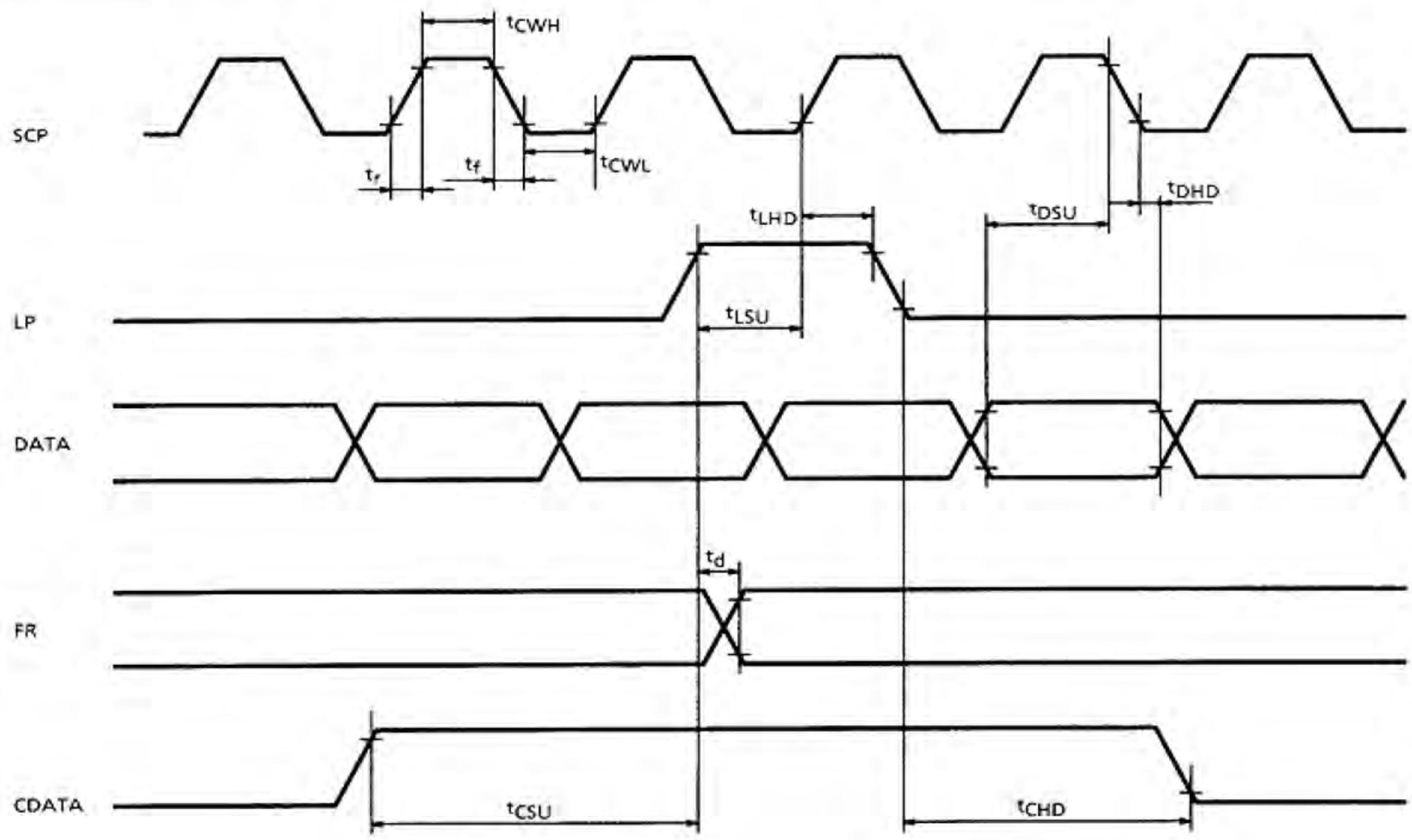

TEST CONDITIONS (Unless otherwise noted, $V_{DD} = 5.0V \pm 10\%$, $V_{SS} = 0V$, Ta = −20 to 70°C)

ITEM	SYMBOL	TEST CONDITIONS	MIN	MAX	UNIT
Operating Frequency	f_{scp}	Ta = −10~70°C	—	2.75	MHz
SCP Pulse Width	t_{CWH}, t_{CWL}	—	150	—	ns
SCP Rise / Fall Time	t_r, t_f	—	—	30	ns
LP Set-up Time	t_{LSU}	—	150	290	ns
LP Hold Time	t_{LHD}	—	5	40	ns
Data Set-up Time	t_{DSU}	—	170	—	ns
Data Hold Time	t_{DHD}	—	80	—	ns
FR Delay Time	t_d	—	0	90	ns
CDATA Set-up Time	t_{CSU}	—	450	850	ns
CDATA Hold Time	t_{CHD}	—	450	950	ns

Switching Characteristics (2)

Bus Timing

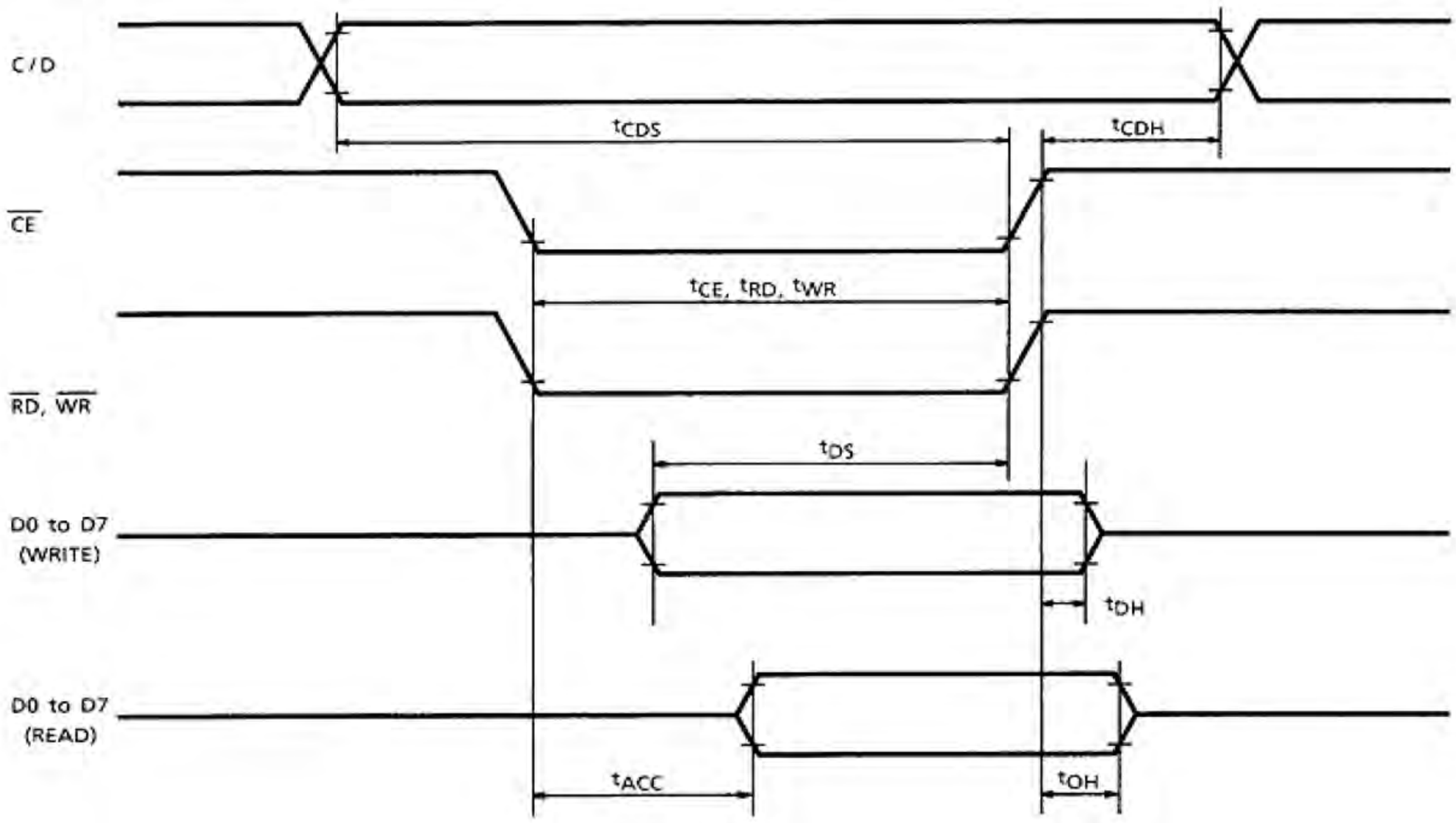

TEST CONDITIONS (Unless otherwise noted, $V_{DD} = 5.0V \pm 10\%$, $V_{SS} = 0V$, Ta = −20 to 75°C)

ITEM	SYMBOL	TEST CONDITIONS	MIN	MAX	UNIT
C/D Set-up Time	t_{CDS}	—	100	—	ns
C/D Hold Time	t_{CDH}	—	10	—	ns
$\overline{CE}$, $\overline{RD}$, $\overline{WR}$ Pulse Width	t_{CE}, t_{RD}, t_{WR}	—	80	—	ns
Data Set-up Time	t_{DS}	—	80	—	ns
Data Hold Time	t_{DH}	—	40	—	ns
Access Time	t_{ACC}	—	—	150	ns
Output Hold Time	t_{OH}	—	10	50	ns

Switching Characteristics (3)

(1) External RAM Read mode

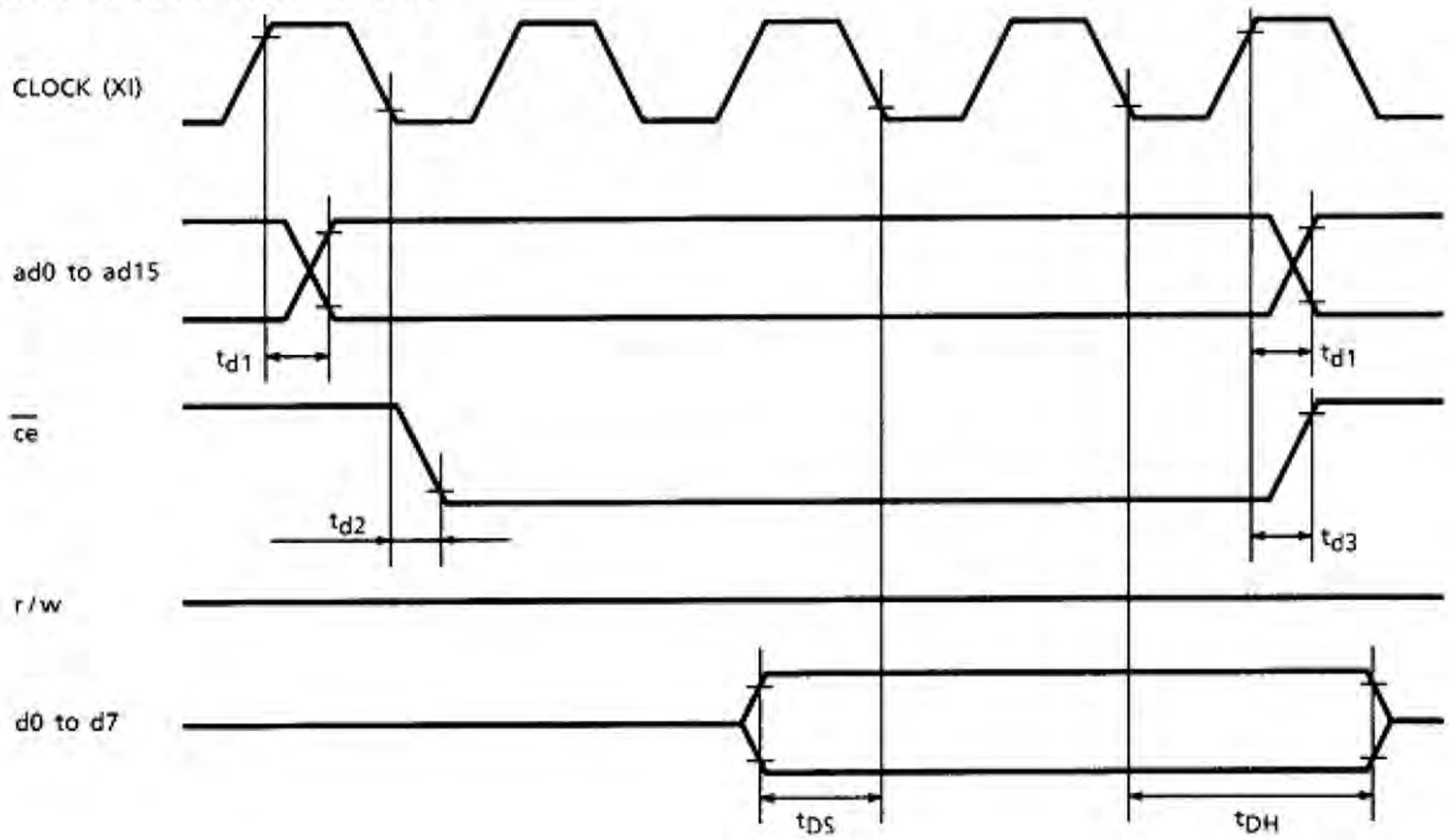

(2) External RAM Write mode

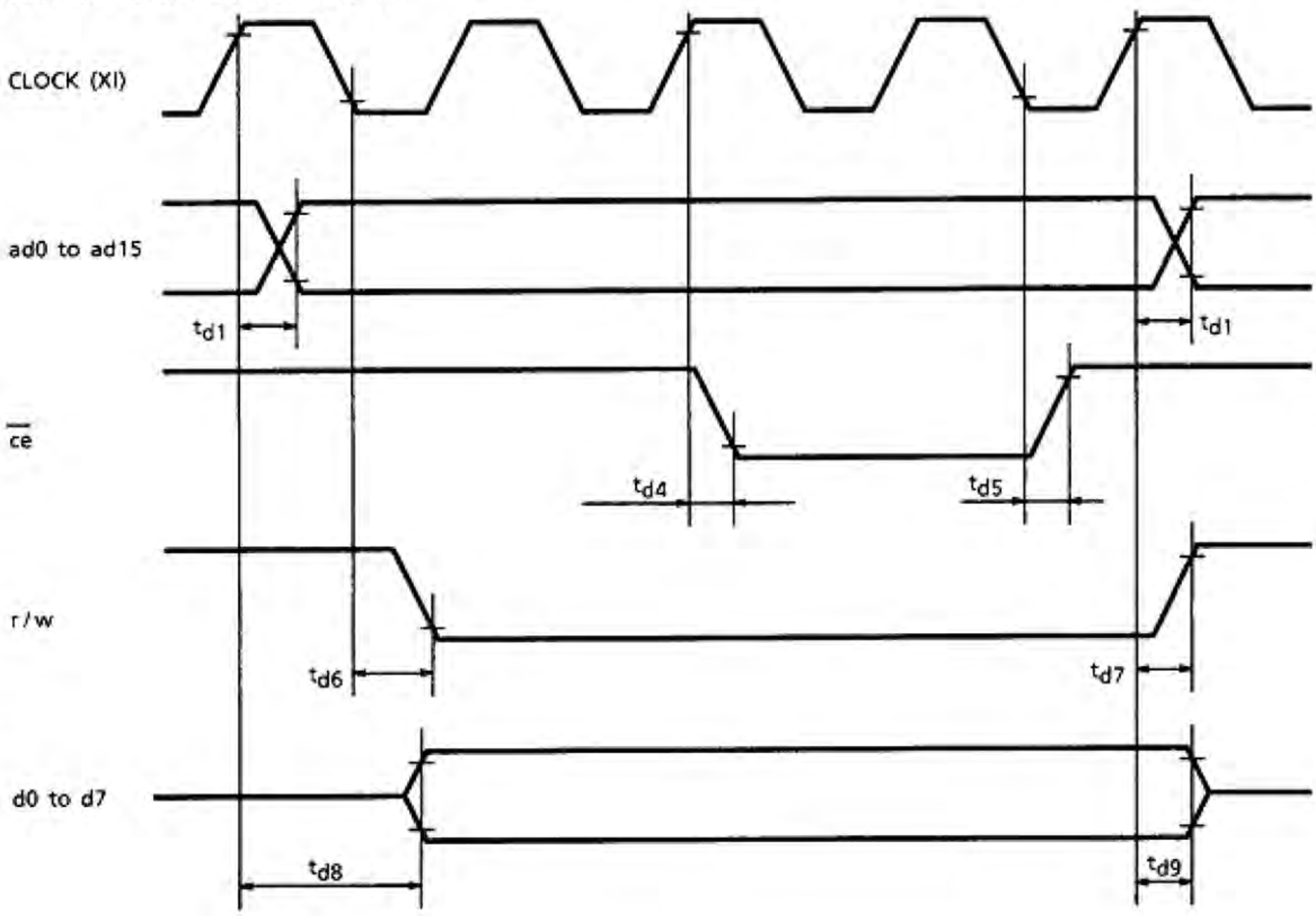

TEST CONDITIONS (Unless otherwise noted, $V_{DD} = 5.0V \pm 10\%$, $V_{SS} = 0V$, Ta = −20 to 70°C)

ITEM	SYMBOL	TEST CONDITIONS	MIN	MAX	UNIT
Address Delay Time	t_{d1}	—	—	250	ns
ce Fall Delay Time (Read)	t_{d2}	—	—	180	ns
ce Rise Delay Time (Read)	t_{d3}	—	—	180	ns
Data Set-up Time	t_{DS}	—	0	—	ns
Data Hold Time	t_{DH}	—	30	—	ns
ce Fall Delay Time (Write)	t_{d4}	—	—	200	ns
ce Rise Delay Time (Write)	t_{d5}	—	—	200	ns
r/w Fall Delay Time	t_{d6}	—	—	180	ns
r/w Rise Delay Time	t_{d7}	—	—	180	ns
Data Stable Time	t_{d8}	—	—	450	ns
Data Hold Time	t_{d9}	—	—	200	ns

OPTICAL CHARACTERISTICS

	SYMBOL	CONDITION	M_{IN}	T_{YP}	M_{AX}	UNIT	NOTE
Contrast ratio	CR	θ=0, Φ=0	--	4	--	--	--
Response time(rise)	Tr	25℃	--	--	200	ms	--
Response time(fall)	Td		--	--	250		--
Viewing angle	θf	25℃	--	35	--	deg.	--
	θb		--	30	--		--
	θl		--	20	--		--
	θr		--	20	--		--

Note1: Definition Operation Voltage (Vop.)

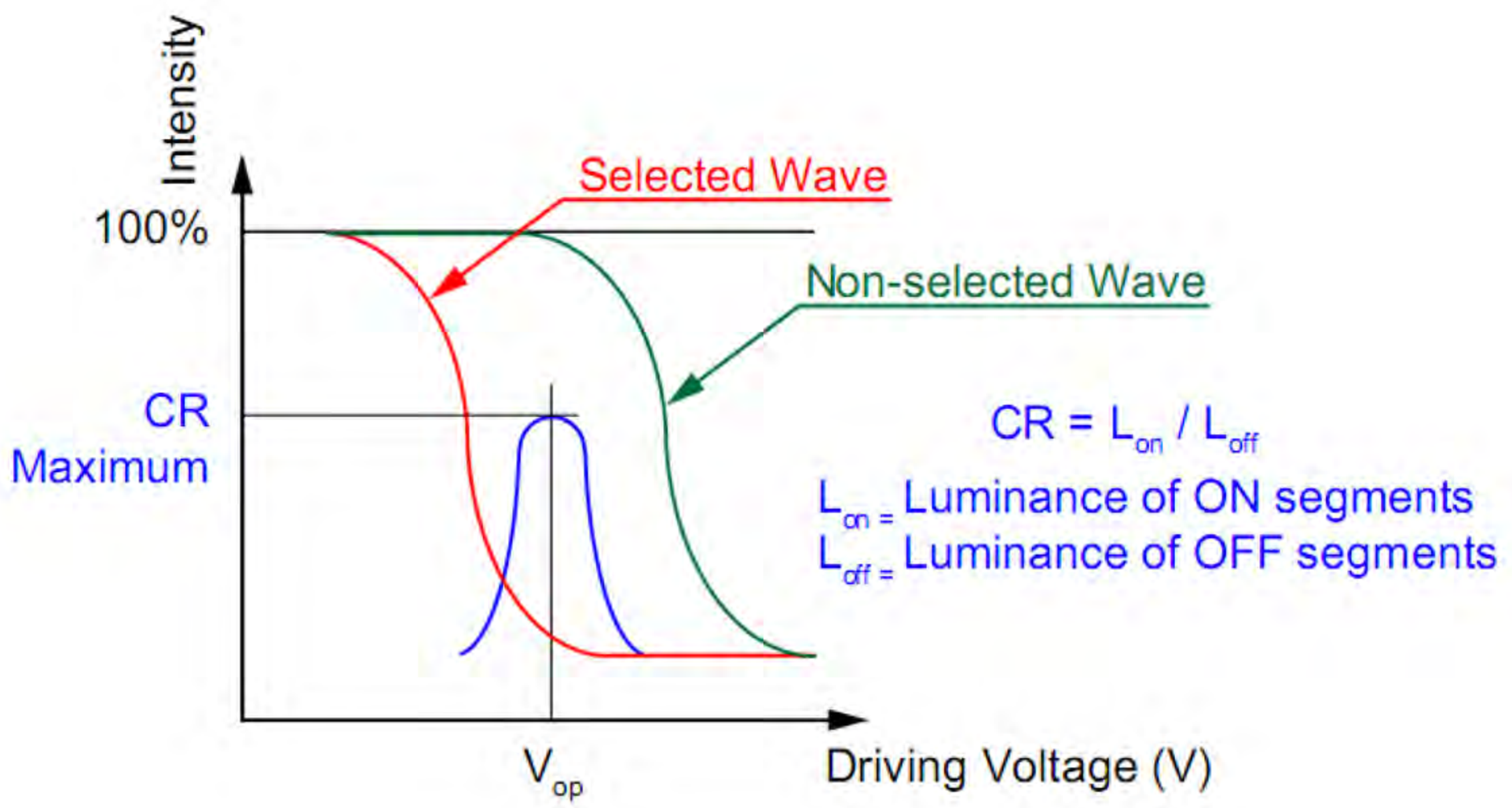

Note2: Response time

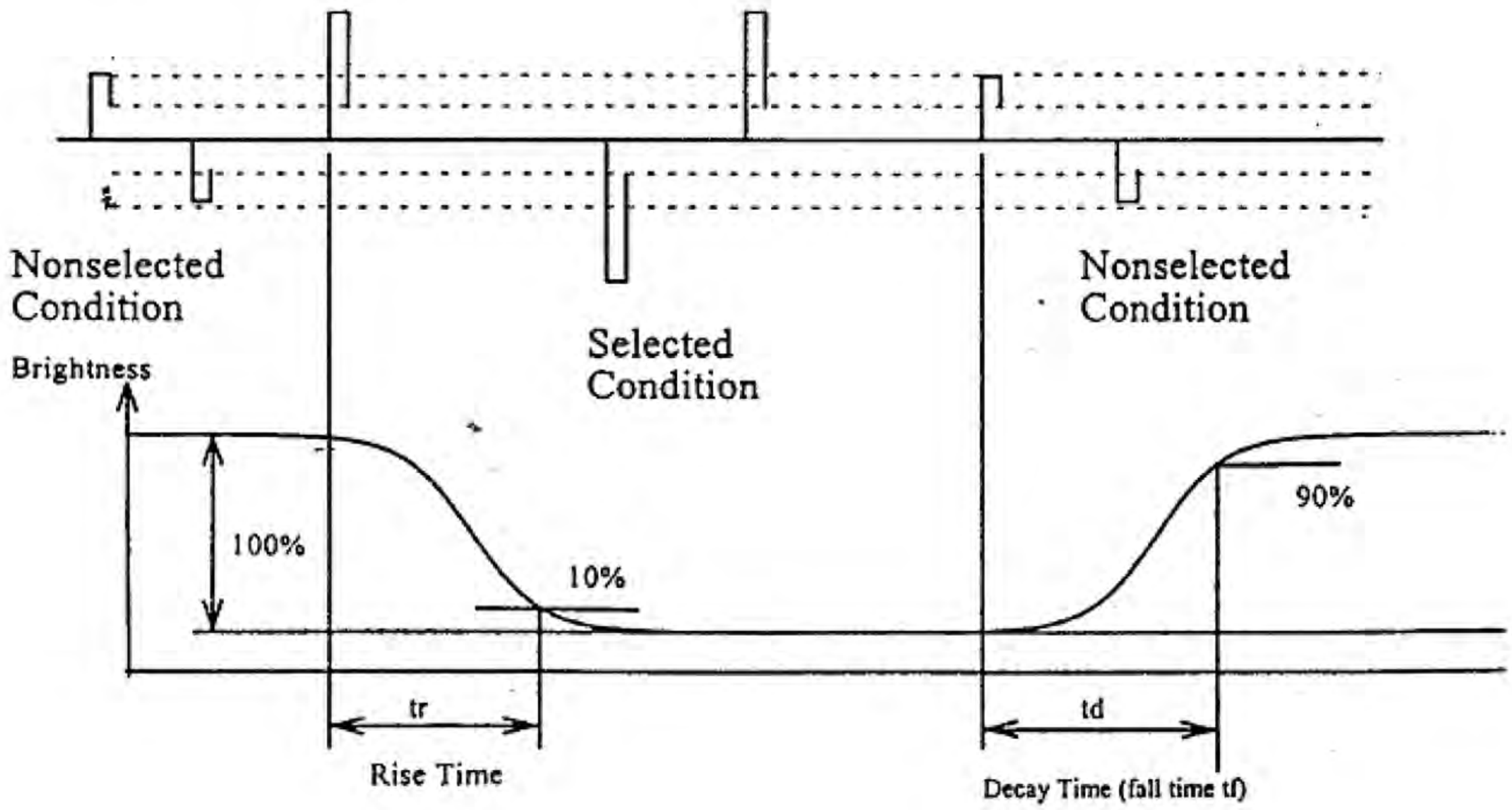

Note3: Viewing angle

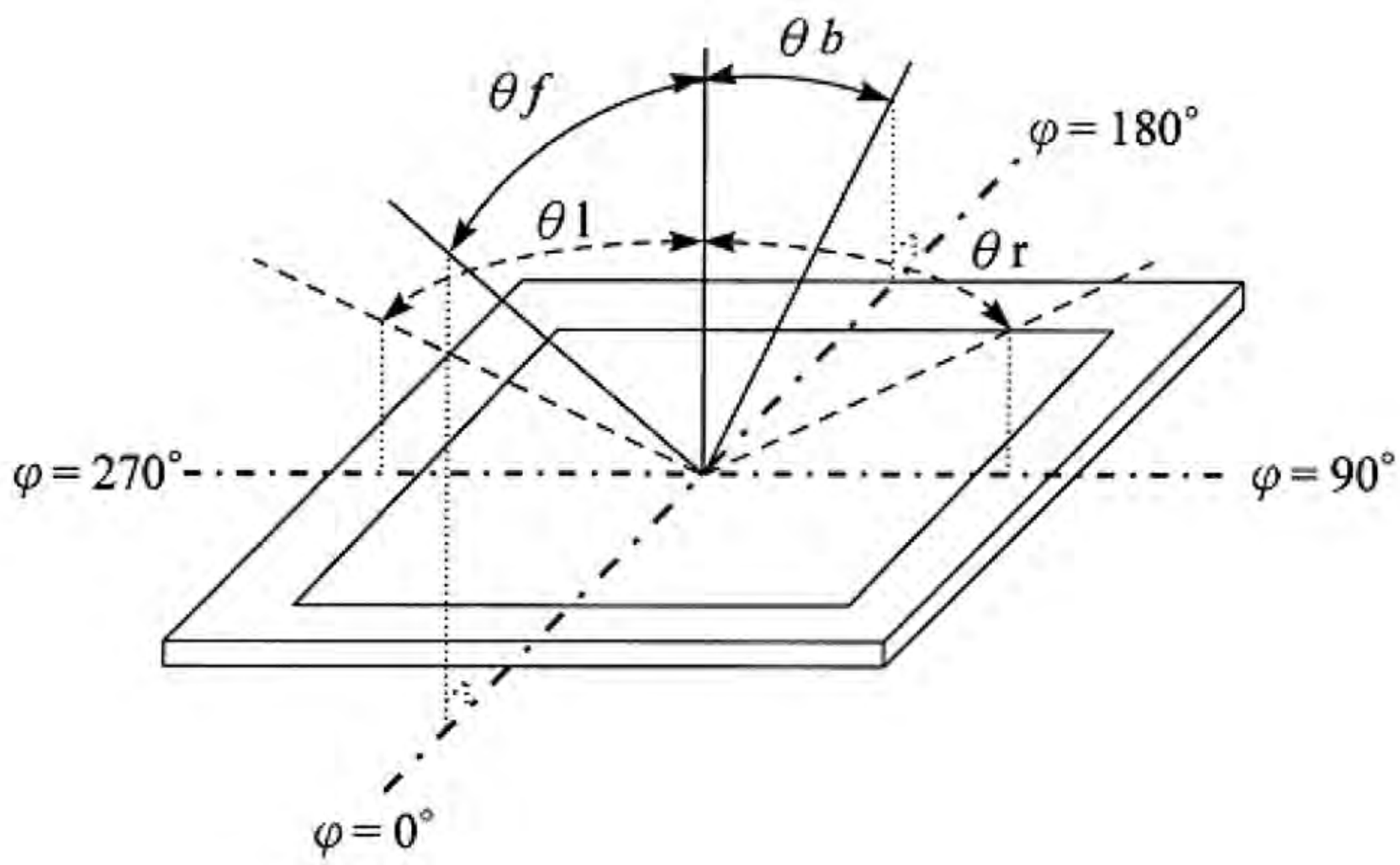

DISPLAY FUNCTIONS

FUNCTIONAL DEFINITION:

- After power on, it is necessary to reset. The $\overline{RST}$ is kept Low between 5 clocks up (oscillation clock).
- When $\overline{HALT}$ = Low, the oscillation stops. The power supply for the LCD must be turned off, to protect the LCD from DC bias.
- The HALT function($\overline{HALT}$ = Low) includes the RESET function($\overline{RST}$ =Low).
- The column/line counter and display register are cleared by $\overline{RST}$. (Other registers are not cleared.) Disable the display using the clear-display register
- The status must be checked before data or commands are sent. The MSB=0 status check must be done in particular. There is a possibility of erroneous operation due to a hard interrupt.
- STA0 and STA1 must be checked at the same time. When a command is executed, data transmission errors may occur.
- The RA6963 can only handle one byte per machine cycle (16 clocks). It is impossible to send more than two data in a machine cycle.
- When using a command with operand data, it important to send the data first, and then executes the command.
- The character fonts used by the RA6963 are different from ASCII codes.

COMMAND DEFINITIONS:

COMMAND	CODE	D1	D2	FUNCTION
REGISTERS SETTING	00100001	X address	Y address	Set Cursor Pointer
	00100010	Data	00H	Set Offset Register
	00100100	Low address	High address	Set Address Pointer
SET CONTROL WORD	01000000	Low address	High address	Set Text Home Address
	01000001	Columns	00H	Set Text Area
	01000010	Low address	High address	Set Graphic Home Address
	01000011	Columns	00H	Set Graphic Area
MODE SET	1000X000	—	—	OR mode
	1000X001	—	—	EXOR mode
	1000X011	—	—	AND mode
	1000X100	—	—	Text Attribute mode
	10000XXX	—	—	Internal CG ROM mode
	10001XXX	—	—	External CG RAM mode
DISPLAY MODE	10010000	—	—	Display off
	1001XX10	—	—	Cursor on, blink off
	1001XX11	—	—	Cursor on, blink on
	100101XX	—	—	Text on, graphic off
	100110XX	—	—	Text off, graphic on
	100111XX	—	—	Text on, graphic on
CURSOR PATTERN SELECT	10100000	—	—	1-line cursor
	10100001	—	—	2-line cursor
	10100010	—	—	3-line cursor
	10100011	—	—	4-line cursor
	10100100	—	—	5-line cursor
	10100101	—	—	6-line cursor
	10100110	—	—	7-line cursor
	10100111	—	—	8-line cursor
DATA AUTO READ / WRITE	10110000	—	—	Set Data Auto Write
	10110001	—	—	Set Data Auto Read
	10110010	—	—	Auto Reset
DATA READ / WRITE	11000000	Data	—	Data Write and Increment ADP
	11000001	—	—	Data Read and Increment ADP
	11000010	Data	—	Data Write and Decrement ADP
	11000011	—	—	Data Read and Decrement ADP
	11000100	Data	—	Data Write and Nonvariable ADP
	11000101	—	—	Data Read and Nonvariable ADP
SCREEN PEEK	11100000	—	—	Screen Peek
SCREEN COPY	11101000			Screen Copy
BIT SET / RESET	11110XXX	—	—	Bit Reset
	11111XXX	—	—	Bit Set
	1111X000	—	—	Bit 0 (LSB)
	1111X001	—	—	Bit 1
	1111X010	—	—	Bit 2
	1111X011	—	—	Bit 3
	1111X100	—	—	Bit 4
	1111X101	—	—	Bit 5
	1111X110	—	—	Bit 6
	1111X111	—	—	Bit 7 (MSB)

X : invalid

CHARACTER CODE MAP

CGROM Font - 01

LSB / MSB	0	1	2	3	4	5	6	7	8	9	A	B	C	D	E	F
0		!	"	#	$	%	&	'	(	)	*	+	,	-	.	/
1	0	1	2	3	4	5	6	7	8	9	:	;	<	=	>	?
2	@	A	B	C	D	E	F	G	H	I	J	K	L	M	N	O
3	P	Q	R	S	T	U	V	W	X	Y	Z	[	\	]	^	_
4	`	a	b	c	d	e	f	g	h	i	j	k	l	m	n	o
5	p	q	r	s	t	u	v	w	x	y	z	{	|	}	~	
6	Ç	ü	é	â	ä	à	å	ç	ê	ë	è	ï	î	ì	Ä	Å
7	É	æ	Æ	ô	ö	ò	û	ù	ÿ	Ö	Ü	¢	£	¥	₧	ƒ

< Figure 6-13 >

CGROM Font – 02

LSB / MSB	0	1	2	3	4	5	6	7	8	9	A	B	C	D	E	F
0		!	"	#	$	%	&	'	(	)	*	+	,	-	.	/
1	0	1	2	3	4	5	6	7	8	9	:	;	<	=	>	?
2	@	A	B	C	D	E	F	G	H	I	J	K	L	M	N	O
3	P	Q	R	S	T	U	V	W	X	Y	Z	[	¥	]	^	_
4	ｷ	ｸ	ｹ	ｺ	ｻ	■	ｦ	ｧ	ｨ	ｩ	ｪ	ｫ	ｬ	ｭ	ｮ	ｯ
5	ｰ	ｱ	ｲ	ｳ	ｴ	ｵ	ｶ	ｷ	ｸ	ｹ	ｺ	ｻ	ｼ	ｽ	ｾ	ｿ
6	ﾀ	ﾁ	ﾂ	ﾃ	ﾄ	ﾅ	ﾆ	ﾇ	ﾈ	ﾉ	ﾊ	ﾋ	ﾌ	ﾍ	ﾎ	ﾏ
7	ﾐ	ﾑ	ﾒ	ﾓ	ﾔ	ﾕ	ﾖ	ﾗ	ﾘ	ﾙ	ﾚ	ﾛ	ﾜ	ﾝ	ﾞ	ﾟ

< Figure 6-14 >

RELIABILITY TEST CONDITION

No.	TEST Item	Content of Test	Test Condition	Applicable Standard
1	High temperature storage	Endurance test applying the high storage Temperature for a long time.	80ºC 96hrs	--
2	Low temperature storage	Endurance test applying the low storage Temperature for a long time	-30ºC 96hrs	--
3	High temperature operation	Endurance test applying the electric stress (Voltage & current)and the thermal stress to the element for a long time	70ºC 96hrs	--
4	Low temperature operation	Endurance test applying the electric stress Under low temperature for a long time	-20ºC 96hrs	--
5	High temperature/ Humidity storage	Endurance test applying the electric stress(Voltage & current) and Temperature/ Humidity stress to the element for a long time	40ºC 90%RH 96hrs	--
6	High temperature/ Humidity operation	Endurance test applying the electric stress (voltage & current)and temperature/ humidity stress to the element for a long time	40ºC 90%RH 96hrs	--
7	Temperature cycle	Endurance test applying the low and high temperature cycle. -20ºC →25ºC→70ºC 30min←5min←30min.(1 cycle)	-20ºC/70ºC 10 cycle	--

Supply voltage for logic system = 5V. Supply voltage for LCD system = Operating voltage at 25ºC.

MECHANICAL TEST

Vibration test	Endurance test applying the vibration during transportation and using	10~22Hz→1.5mmp-p 22~500Hz→1.5G Total 0.5hour	Applicable Standard
Shock test	Constructional and mechanical endurance test applying the shock during transportation.	50G half sign wave 11 msede 3 times of each direction	--
Atmospheric pressure test	Endurance test applying the atmospheric pressure during transportation by air	115mbar 40hrs	--
Static electricity test	Endurance test applying the electric stress to the terminal	VS=800V,RS-1.5KΩ CS=100pF, 1 time	--

Environmental condition

The inspection should be performed at the 1metre height from the LCD module under 2 pieces of 40W white fluorescent lamps (Normal temperature 20~25℃ and normal humidity 60±15%RH).

PRECAUTION FOR SOLDERING TO THE LCM

(1) Observe the following when soldering lead wire, connector cable and etc. to the LCM.

- Soldering iron temperature : 265°C ± 10°C.
- Soldering time : 3-6 sec.
- Solder : eutectic solder.

If soldering flux is used, be sure to remove any remaining flux after finishing to soldering operation. (This does not apply in the case of a non-halogen type of flux.) It is recommended that you protect the LCD surface with a cover during soldering to prevent any damage due to flux spatters.

(2) When soldering the electroluminescent panel and PC board, the panel and board should not be detached more than three times. This maximum number is determined by the temperature and time conditions mentioned above, though there may be some variance depending on the temperature of the soldering iron.

(3) When remove the electroluminescent panel from the PC board, be sure the solder has completely melted, the soldered pad on the PC board could be damaged.

PRECAUTION FOR USING LCM MODULE

- Please remove the protection foil of polarizer before using.
- The display panel is made of glass. Do not subject it to a mechanical shock by dropping it from a high place, etc.
- If the display panel is damaged and the liquid crystal substance inside it leaks out, do not get any in your mouth. If the substance come into contact with your skin or clothes promptly wash it off using soap and water.
- Do not apply excessive force to the display surface or the adjoining areas since this may cause the color tone to vary.
- The polarizer covering the display surface of the LCD module is soft and easily scratched. Handle this polarize carefully.
- To prevent destruction of the elements by static electricity, be careful to maintain an optimum work environment.
  -Be sure to ground the body when handling the LCD module.
  -Tools required for assembly, such as soldering irons, must be properly grounded.
  -To reduce the amount of static electricity generated, do not conduct assembly and other work under dry conditions.
  -The LCD module is coated with a film to protect the display surface. Exercise care when peeling off this protective film since static electricity may be generated.
- Storage precautions
  When storing the LCD modules, avoid exposure to direct sunlight or to the light of fluorescent lamps.
  Keep the modules in bags designed to prevent static electricity charging under low temperature / normal humidity conditions (avoid high temperature / high humidity and low temperatures below 0℃).Whenever possible, the LCD modules should be stored in the same conditions in which they were shipped from our company.

OTHERS

- Liquid crystals solidify at low temperature (below the storage temperature range) leading to defective orientation of liquid crystal or the generation of air bubbles (black or white). Air bubbles may also be generated if the module is subjected to a strong shock at a low temperature.

- If the LCD modules have been operating for a long time showing the same display patterns may remain on the screen as ghost images and a slight contrast irregularity may also appear. Abnormal operating status can be resumed to be normal condition by suspending use for some time. It should be noted that this phenomena does not adversely affect performance reliability.

- To minimize the performance degradation of the LCD modules resulting from caused by static electricity, etc. exercise care to avoid holding the following sections when handling the modules :
  - Exposed area of the printed circuit board
  - Terminal electrode sections